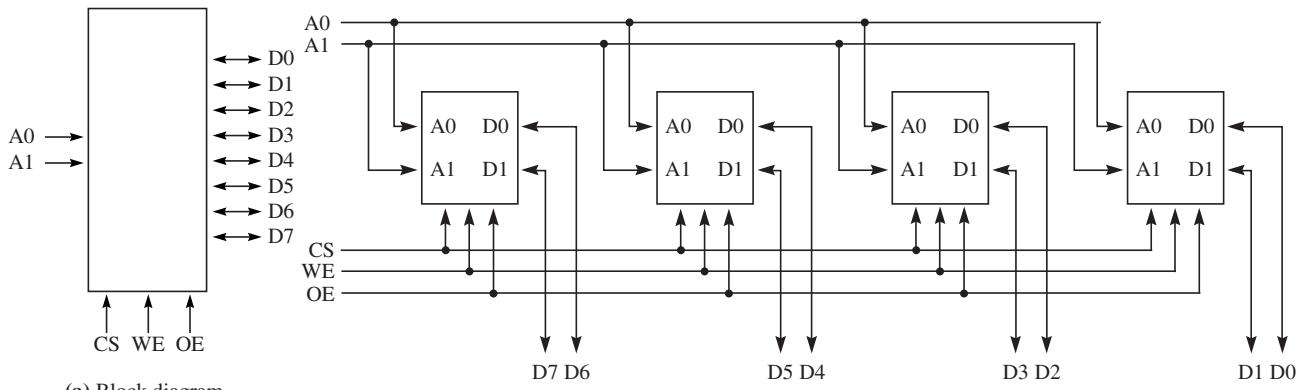

(a) Block diagram.

(b) Implementation.